KP101 KP102 SERIES

Features

- Simple installation, plug-in port or thread-in fitting
- Setting pressure range : -0.1 ~ 0.4 MPa
- Normally Open / Normally Close

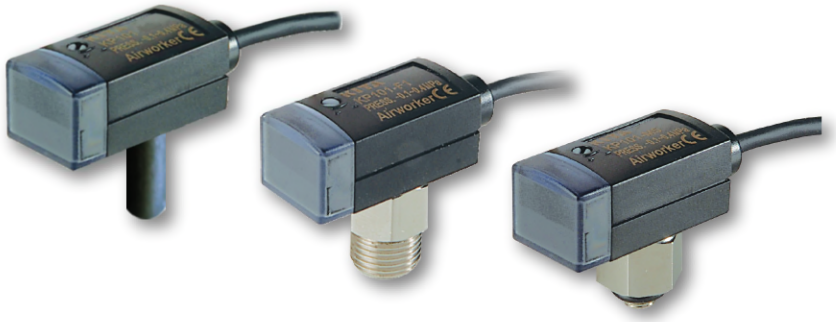

■ SPECIFICATIONS

MODEL	KP101	KP102
0.4 MPa 0 -0.1 MPa	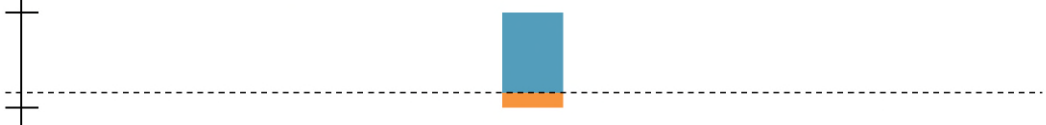	
Operating pressure range	-0.1 ~ 1.0 MPa	
Setting pressure range	-0.1 ~ 0.4 MPa	
Fluid	Filtered air, Non-corrosive/Non-flammable gas	

■ FEATURES HIGHLIGHT

1 Simple installation

Plug-in port for push-to-connect fittings

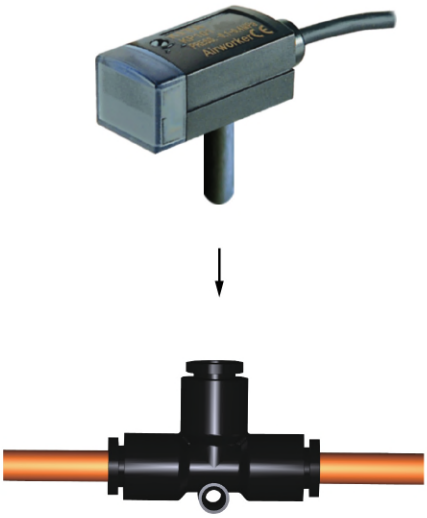

2 Compact size

Extremely compact size 30(L)x13(W)x12(H)mm to fit the most confined areas

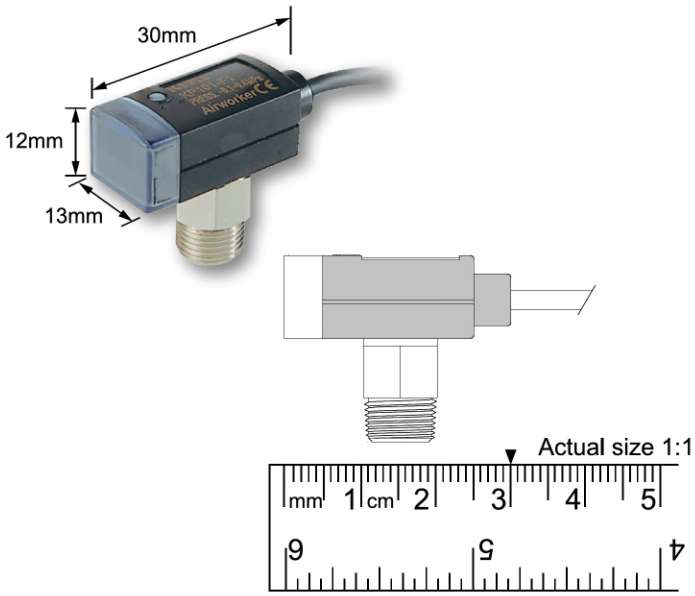

SPECIFICATIONS

MODEL	KP101	KP102
0.4 MPa 0 -0.1 MPa	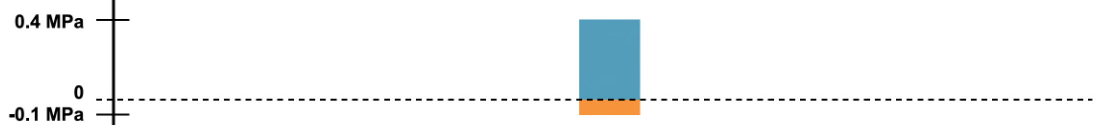	
Operating pressure range	- 0.1 ~ 1.0 MPa	
Setting pressure range	- 0.1 ~ 0.4 MPa	
Fluid	Filtered air, Non-corrosive/Non-flammable gas	
Load voltage	12 to 24V DC ±10%, Ripple (P-P) 10% or less	
Load current	5 ~ 40mA	
Leak current	≤ 1mA	
Internal voltage drop	≤ 5V	
Switch output	Present Press . ≥ Set Press. : ON	Present Press . ≥ Set Press. : OFF
Repeatability	±1% F.S.	
Response time	Approx. 1ms	
Hysteresis	≤ 4% F.S.	
Indicator	Red LED turns ON	
Enclosure	IP 40	
Temperature characteristic	±3% F.S. of detected pressure (25 °C) at temp. Range of 0~50°C	
Ambient temp. range	Operation : 0 ~ 60 °C (No condensation or freezing)	
Piping method	Push-in or screw-in	
Lead wire	Oil-resistance cable, 2 wires (0.18mm²), Ø 2.6mm	
Weight	Approx. 38g (with 2 meter lead wire)	

CIRCUIT WIRING DIAGRAM

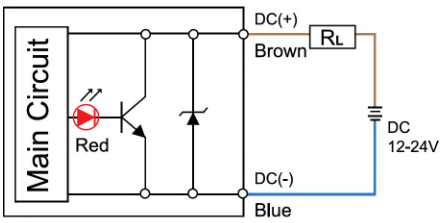

INSTALLATION PRECAUTIONS

- When mounting, always use the wrench on the metallic area near the pressure port. Never apply a wrench to the plastic body, it will damage the sensor.
- Over tightening may cause damages to the port thread, mounting bracket and pressure sensor. Under tightening may result loosen or leakage.
- Apply pressure and power after installation and make necessary adjustments and inspect any possible signs of leakage to ensure proper installation.

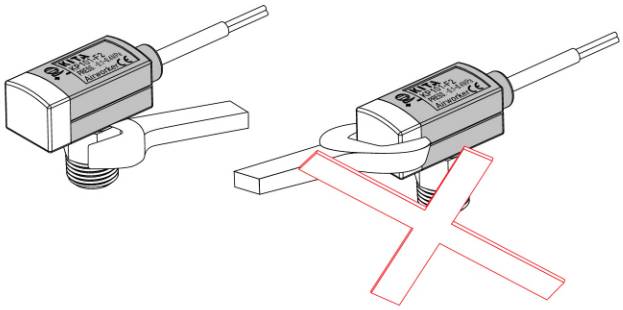

■ ORDERING INFORMATION

K P 1 0 1 - F 1- [ ]

Sensor Specification

101 : Switch turns ON when the pressure is larger than setting pressure.

102 : Switch turns OFF when the pressure is larger than setting pressure.

Cable Length / Connector

Blank : With 2 meter cable
C : With M8 3Pin male connector

Optional Part

M83R-W0114-2M : With M8 3Pin female connector

Optional Part

M8 3Pin female connector

■ M83R-W0114-2M

Pressure Port	R6	F1 / F2 / F3	M5
Appearance	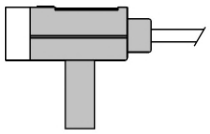	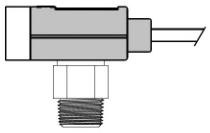	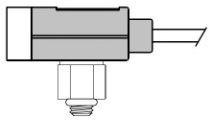
Port size	R6 : Ø 6mm	F1 : R1/8", M5 F2 : NPT1/8", M5 F3 : G1/8"(BSPP), M5	M5 : M5*0.8

■ HOW TO SET PRESSURE

- Use the pressure setting trimmer to set "ON" pressure. Rotate clockwise to increase pressure setpoint (or to decrease vacuum setpoint). Rotate counter-clockwise to decrease pressure setpoint (or to increase vacuum setpoint).
- Use appropriate size screwdriver for the setting trimmers. Gently turn the screwdriver to make adjustments. To prevent damage to the pressure setting trimmer, DO NOT force the trimmer when it comes to a stop.

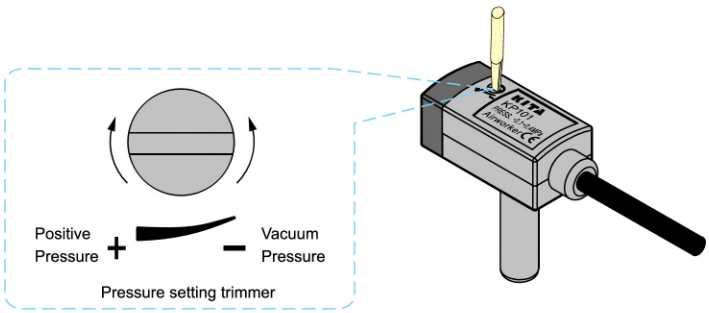

■ OUTPUT TYPE

KP101

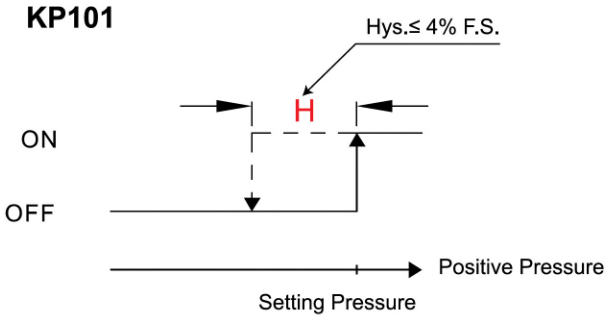

KP102

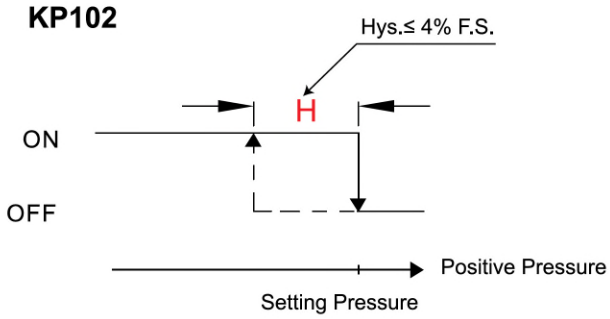

■ DIMENSIONS

KP10☐ - ☐

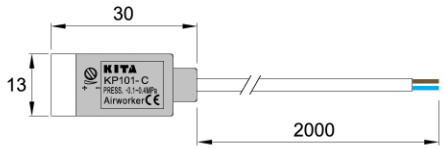

KP10☐ - M5

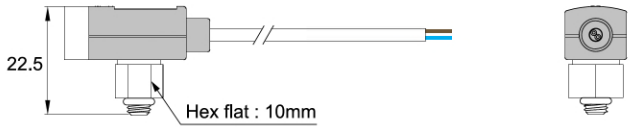

KP10☐ - F1, F2, F3

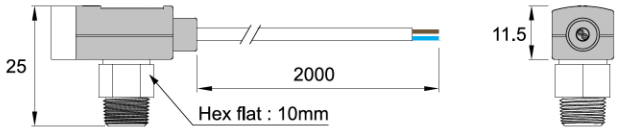

KP10☐ - R6

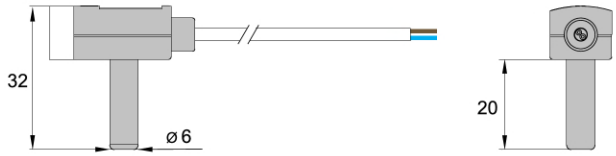

KP10☐ - ☐ - C

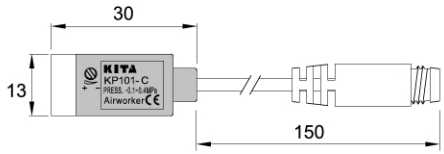

KP10☐ - M5 - C

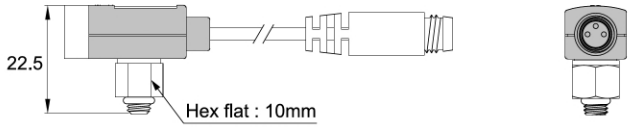

KP10☐ - F1, F2, F3 - C

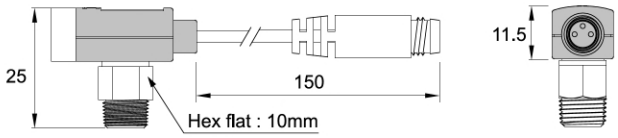

KP10☐ - R6 - C

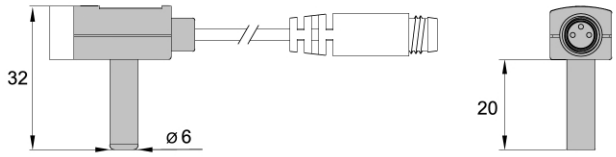

QD PINOUT

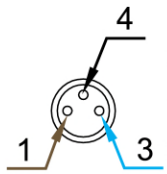

(1) Brown(+)
(3) Blue (-)
(4) Not used

■ OPTIONAL PART DIMENSIONS

M8 Female Connector

model : M83R-W0114-2M

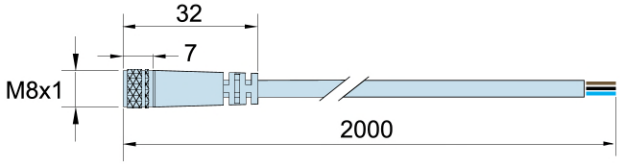

Unit:mm