KP70 SERIES

Features

- Smart Pressure sensor
- Remote control
- Real-time monitoring
- RS-485 Modbus RTU/ASCII
- 4 digit, 7 segment LCD display

■ SPECIFICATIONS

TYPE	Compound	Vacuum	Positive
MODEL	KP70C	KP70V	KP70P
1.0 MPa 100.0 kPa 0 -101.3 kPa	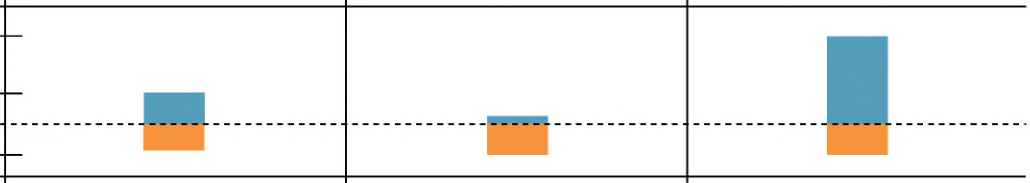		
Rated pressure range	-100.0 ~ 100.0 kPa	0.0 ~ -101.3 kPa	0.000 ~ 1.000 MPa
Setting pressure range	-101.0 ~ 101.0 kPa	10.0 ~ -101.3 kPa	-0.100 ~ 1.000 MPa

■ FEATURES HIGHLIGHT

1 Station Setting Display

- Provide 0 ~ 255 station to set the sensor.

ID number display

2 Modes Display

- Three modes show on the screen.

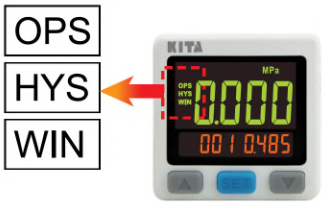

3 Setting Value Easy Indication

- User can easily observe the setting value from sub-display.

Main/Sub-Display

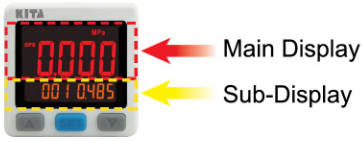

4 Easy Unit Identification

- Conversion unit is on display and easy to read.

5 2-Color Main Display

- User programmable color mode, for different setting conditions.

	Sof	Sor	Grn	rEd
ON	Green	Red	Green	Red
OFF	Red	Green	Green	Red

6 OPS Quick Setting

- Sub-display allows changing the parameter directly, reduce setting step by 3/4.

Up/Down quick setting

Finished setting

■ SPECIFICATIONS

MODEL		KP70C (Compound)	KP70V (Vacuum)	KP70P (Positive)
		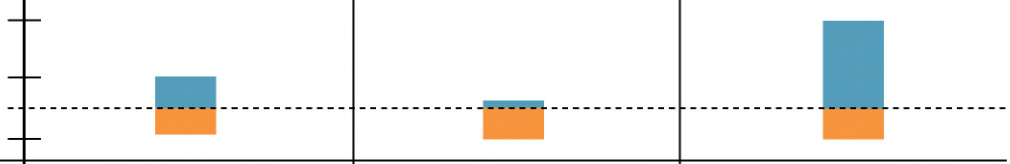		
Rated pressure range		-100.0 ~ 100.0 kPa	0.0 ~ -101.3 kPa	0.000 ~ 1.000 MPa
Set pressure range		-101.0 ~ 101.0 kPa	10.0 ~ -101.3 kPa	-0.100 ~ 1.000 MPa
Withstand pressure		500 kPa		1.5 MPa
Fluid		Filtered air, Non-corrosive / Non-flammable gas		
Set pressure resolution	kPa	0.1		-
	MPa	-		0.001
	kgf/cm²	0.001		0.01
	bar	0.001		0.01
	psi	0.01		0.1
	inHg	0.1		-
	mmHg	1		-
Power supply voltage		12 to 24V DC ±10%, Ripple (P-P) 10% or less		
Current consumption		≤ 40mA(With no load)		
Switch output		NPN: open collector 1 outputs Max. load current: 125mA Max. supply voltage: 30V DC Residual voltage: ≤ 1.5V	PNP: open collector 1 outputs Max. load current: 125mA Max. supply voltage: 24V DC Residual voltage: ≤ 1.5V	
Repeatability(Switch output)		±0.2% F.S. ±1 digit		
Hysteresis	One point set mode	Adjustable(*1)		
	Hysteresis mode			
	Window comparator mode			
Response time		≤ 2.5ms (chattering-proof function: 25ms, 100ms, 250ms, 500ms, 1000ms, 1500ms, 2000ms and 5000ms selectable)		
Output short circuit protection		Yes		
7 segment LCD display		Two color(Red/Green) main & unit display, Orange sub-display (Sampling rate : 0.2 , 0.5 , 1 seconds/time selectable)		
Indicator accuracy		±2% F.S. ±1 digit (ambient temperature: 25 ±3°C)		
Switch ON Indicator		Orange (1 Indicator) OUT1		
Environment	Environment	IP40		
	Ambient temp. range	Operation: 0 ~ 50°C, Storage:-10 ~ 60°C (No condensation or freezing)		
	Ambient humidity range	Operation/Storage: 35 ~ 85% RH (No condensation)		
	Withstand voltage	1000V AC in 1-min (between case and lead wire)		
	Insulation resistance	50MΩ (at 500V DC, between case and lead wire)		
	Vibration	Total amplitude 1.5mm or 10G,10Hz-55Hz-10Hz scan for 1 minute, two hours each direction of X, Y and Z		
	Shock	100m/s² (10G), 3 times each in direction of X, Y and Z		
Temperature characteristic		±2.5% F.S. of detected pressure (25°C) at temp. Range of 0~50°C		
Communication interface		RS-485		
Port size		F1：R1/8", M5; F2：NPT1/8", #10-32 UNF; F3：G1/8"(BSPP), M5		
Lead wire		Oil-resistance cable(0.15mm²)		
Weight		Approx. 80g (with 2 meter lead wire)		

【 NOTE 】 *1 : Hysteresis value is adjustable within 1 ~ 8 digits for one point set mode and window comparator mode.

KP70 SERIES

■ PANEL DESCRIPTION

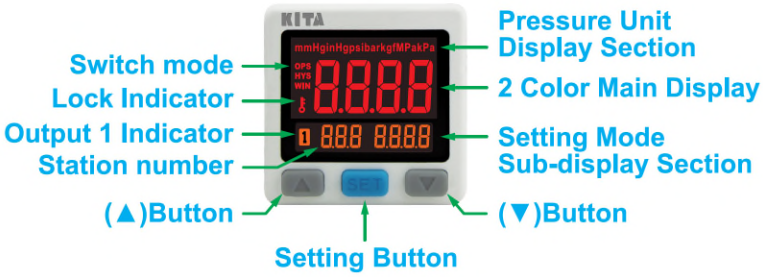

■ INSTALLATION PRECAUTIONS

- When mounting, always use the wrench on the metallic area near the pressure port. Never apply a wrench to the plastic body, it will damage the sensor.
- Over tightening may cause damages to the port thread, mounting bracket and pressure sensor. Under tightening may result loosen or leakage.
- Apply pressure and power after installation and make necessary adjustments and inspect any possible signs of leakage to ensure proper installation.

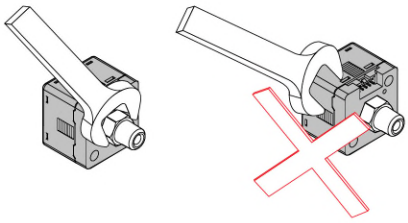

■ OUTPUT CIRCUIT WIRING DIAGRAMS

KP70 □ - 02 - □

NPN output + RS485

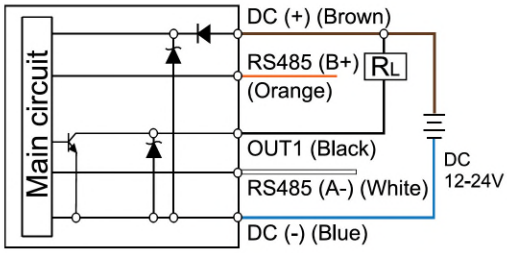

KP70 □ - 04 - □

PNP output + RS485

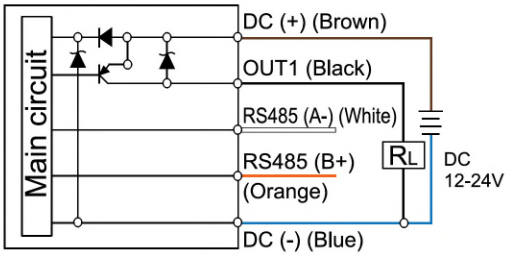

■ ORDERING INFORMATION

K P 7 0 C - 0 2 - F 1

Pressure Range

C : Compound (-101.0 ~ 101.0kPa)
V : Vacuum (10.0 ~ -101.3kPa)
P : Positive (-0.100~1.000MPa)

Output Specifications

02 : 1 NPN output + RS485
04 : 1 PNP output + RS485

Pressure Port

F1 : R 1/8", M5
F2 : NPT 1/8", #10-32UNF
F3 : G 1/8"(BSPP), M5

Optional Parts

BT-12 : Mounting bracket
BT-13 : Mounting bracket
PA-C : Panel adapter
PA-D : Panel adapter + Front protective lid

Optional Parts

Mounting bracket

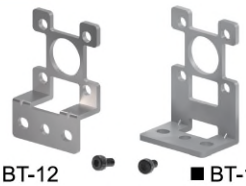

■ BT-12 ■ BT-13

Panel adapter

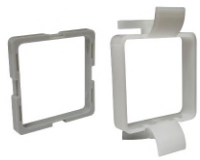

■ PA-C

Panel adapter + Front protective lid

■ PA-D

■ DIMENSIONS

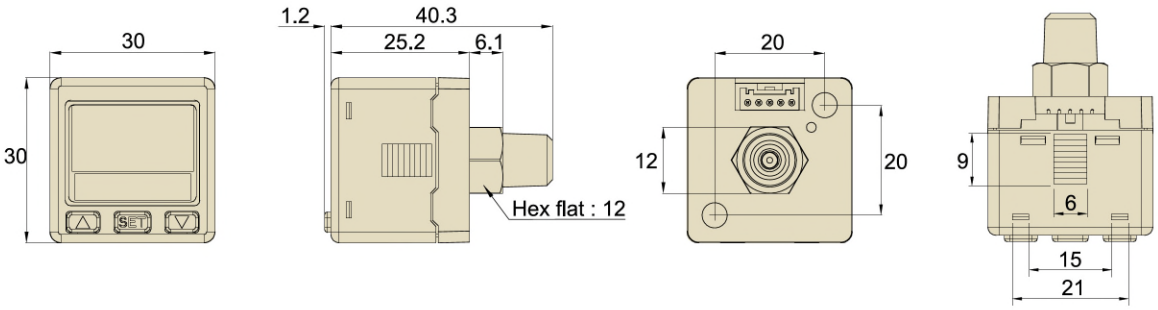

■ OPTIONAL PARTS DIMENSIONS

1 Mounting Bracket

4 mounting directions available

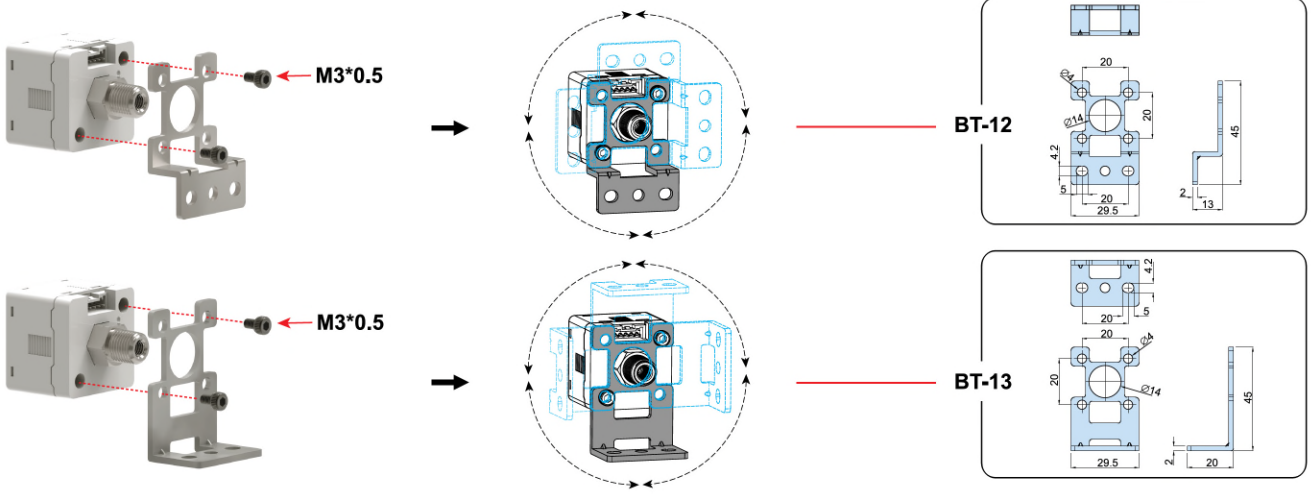

2 Panel Mount Adapter + Front Protective Lid

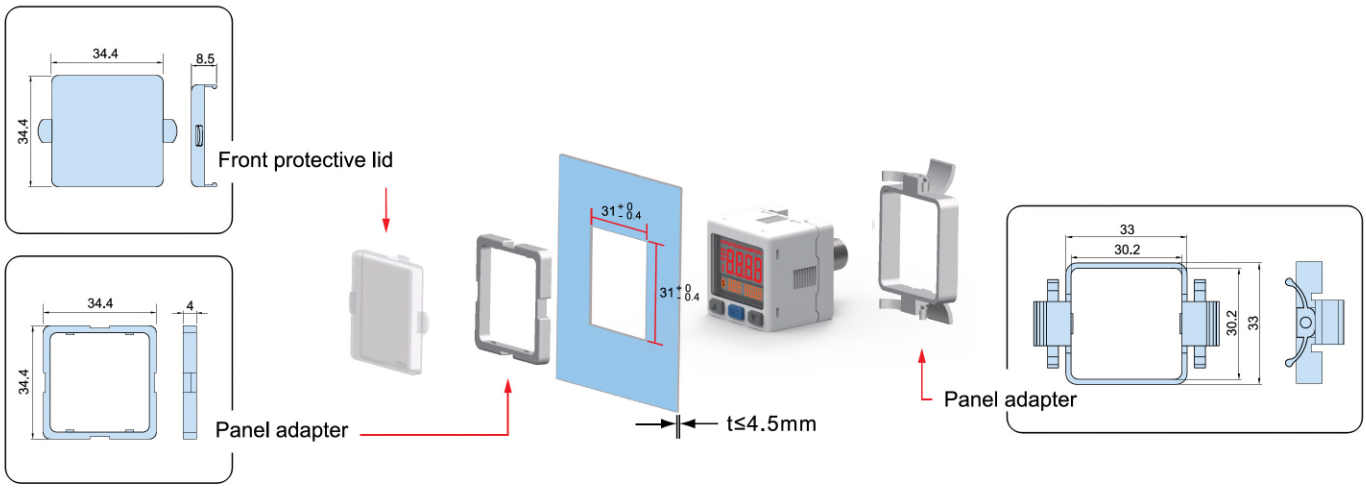

Unit:mm